HYBRIDFLUSH® AUTOMATIC

High Efficiency Quarter Stall Washout Urinal Flush Valve System

Model
AEFC101814U05

Description

Hardwired, Sensor Operated HYBRIDFLUSH® Top Mount Complete HEU System with Concealed Automatic Urinal Flushometer and Top Spud Vitreous China Fixture.

Flush Cycle

☐ Model AEFC101814U05 (0.5 gpf/1.9 Lpf)

Specifications

Flushometer Specification (Model AEF-801-CCU-05)

- Patented BRV® and Gear Motor Drive
- Wall Mount Plate with Sensor
- Hands Free Infrared Sensor Activation
- Vandal and Water Resistant Design
- Chrome Plated All Metal Housing
- Quiet Operation
- Electronic Flush Button
- Operates on 6-Volt DC Power (Transformer Sold Separately)
- Adjustable Sensor Distance
- Optional Water Saver Mode
- Optional Three (3) Second Flush Delay Mode
- Optional 24-Hour Flush Mode
- Uses Proprietary Silicone Diaphragm with Filtered Bypass
- 3/4" I.P.S. Angle Stop
- Adjustable Tailpiece
- High Back Pressure Vacuum Breaker with Single Piece Hex Coupling Nut
- Spud Coupling and Flange for 3/4" Top Spud
- Sweat Solder Kit and Wall Flange with Set Screw
- High Efficiency For Water Conservation

Compliance & Certifications

- ASSE 1037-2015
- ASME A112.1035-2015
- CSA B125.37-15

Listed By IAPMO

For Finish Variations Please Consult Factory

Accessories (Add suffix to model number for accessories)

☐ AMTCTRANS6VDC - 6-Volt AC/DC Transformer

Fixture Specification (Model AUU-1018-14)

- Complies with ADA Accessible Standards
- White Color
- Wall Hung Vitreous China
- Washout Flushing Action
- Elongated Rim
- Integral Flushing Rim
- Integral Trap
- 3/4" (19mm) I.P.S. Top Spud Inlet (Included)
- 2" (50mm) NPT Outlet Flange (Included)
- 100% Factory Tested
- Hanging Bracket (1 included)

Compliance & Certifications

- ASME A112.19.2/CSA B45.1
- Energy Act of 1992
- ADA- With installation consideration for section 604 Water Closets, Accessibility Guidelines.
- ICC/ANSI A117.1
- TAS - With installation consideration for section: 4.16.3. Adult seat height 17" (432mm) to 19" (483mm).
- CSA B651 - With installation consideration for Clause 4.3.6 of the standard.
- ICC-ES PMG® Certified
- WaterSense® Listed

Plumbing System Requirements

- Minimum Flowing Pressure: 25 PSI
- Maximum Static Pressure: 80 PSI
- Minimum Flow Rate: 18 GPM

The HYBRIDFLUSH® Advantage

The **HYBRIDFLUSH®** is a revolutionary full-featured automatic flush valve system. The **HYBRIDFLUSH®** incorporates a unique patented mechanism that allows for unsurpassed reliability. The **HYBRIDFLUSH®** by Advanced Modern Technologies Corporation is the most efficient, economical, and complete automatic flush valve system on the market.

WaterSense Meets EPA Criteria Certified by ICC-ES

HEU HIGH EFFICIENCY URINAL

Warranty
5 Years

AXIO® TOUCH-FREE TECHNOLOGY

ADA Compliant

Architect/Engineer Approval

Job Name_____
Date_____
Model Specified_____
Quantity_____
Variations Specified_____
Customer/Wholesaler_____
Contractor_____
Architect_____

The information contained in this document is subject to change without notice.
Revision (05/18)

HYBRIDFLUSH® AUTOMATIC

High Efficiency Quarter Stall Washout Urinal Flush Valve System

Model
AEFC101814U05

Specifications

Operation:	**Automatic**
Outer Casing:	**Standard-Chrome Metal**
Operating Water Pressure:	**15 PSI - 100 PSI**
Sensor Type:	**Infrared**
Power Type:	**6-Volt DC Power**
Arming Delay:	**5 Seconds**
Sensing Range:	**18" (45cm) - 30" (75cm) Adjustable**
Ghost Flush:	**Once every 24 Hours From Last Flush**
Sensor Angle:	**Fixed Angle**
Flush Cycle:	**Specified by Model**
Model AEFC101814U05	**0.5 gpf/1.9 Lpf**
Flush Mode:	**After Every Use**
Water Saver Mode:	**After Every Other Use**
Manual Override:	**Electronic Flush Button**

Dimensions

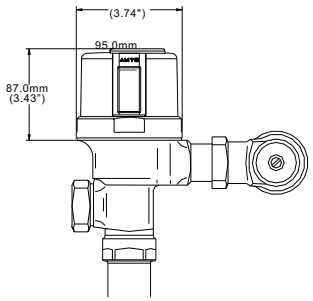

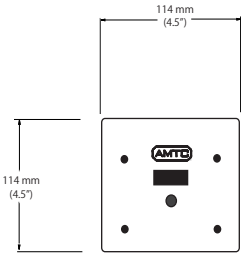

Application

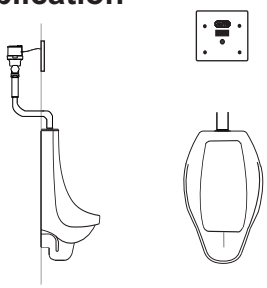

HYBRIDFLUSH® shown on urinal with electrical flush button.

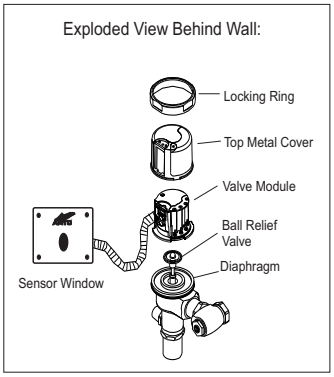

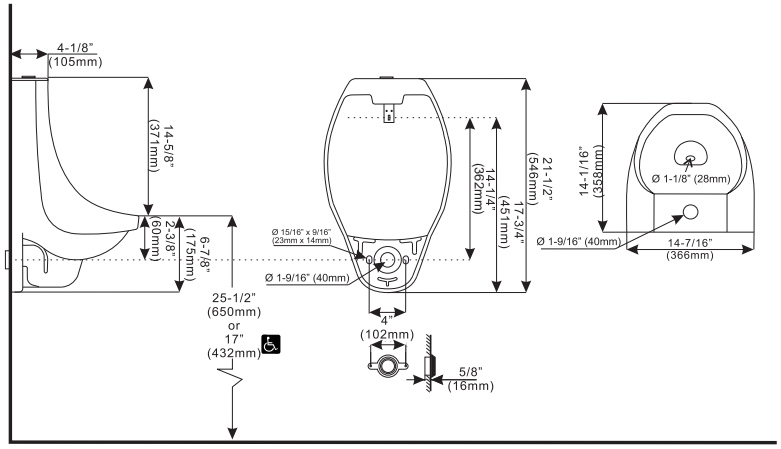

Disclaimer

Note: All vitreous china dimensions shown in these drawings are nominal and not to scale. Dimensions can vary within the tolerances established in the governing ASME A112.19.2/CSA B45.1 standard. It is important to consider this when planning rough-in and plumbing layouts.

Advanced Modern Technologies Corporation • 19800 Nordhoff Place • Chatsworth, CA 91311
Tel: (818) 883-2682 • Toll Free: (800) 874-7822 • Fax: (818) 883-2620 • www.amtcorporation.com

Copyright © 2018 AMTC